A New Versatile Apparatus for Relaxation Kinetics with Shock Waves

Klaus Krtschil and Frank Strohbusch

Institut für Physikalische Chemie, Universität Freiburg, Albertstraße 21, D-7800 Freiburg, Germany

Chemical Kinetics / Methods and Systems / Shock Waves

A new shock wave apparatus uses the discharge of a high voltage capacitor through an organic electrolyte to generate rectangular pressure pulses of typically 8 MPa amplitude and 80 μsec duration. The apparatus permits the study of fast reactions with relaxation times between a few microseconds and about fifty microseconds in any solvent. Measurements on proton transfer reactions in acetonitrile and water are reported.

1. Introduction

Shock waves have proven to be a valuable tool with broad applicability for studying the kinetics of fast reactions in solution [1]. Whereas pressure jump equipment allows measuring relaxation times of at least 50–100 μs, the shock wave technique extends the range down to a few microseconds. This resolution offers significant advantages, because many primary steps of complex reaction mechanisms in organic and inorganic systems have relaxation times shorter than 50 μs and hence can not be studied with the conventional pressure jump apparatus [2].

Different shock wave equipments for work in the liquid phase have been described by Hoffmann and Pauli [3], Jost [4], Hoffmann and Yeager [5] and Platz and Hoffmann [6]. The design of Platz and Hoffmann [6] has been extensively employed. They produce a gas shock wave in a vertically mounted tube. It is reflected at the surface of a liquid column filled into the lower part of the tube, and a shock wave of twice the amplitude travels down the liquid, where it hits the sample at the end of the tube. All the apparatus except for that of Hoffmann and Pauli have in common, that the pressure wave is realized by bursting of a membrane between a section with high and another one with lower pressure. Its rise time is determined by the rupturing time of the membrane of about 50–100 μs depending on the tube diameter. The wave must travel over a distance of 1–2 m to achieve a steplike pressure increase. The handling of the large apparatus is laborious, because it has to be opened after each experiment in order to release the gas and to exchange the membrane. Before changing the solution the liquid column must be removed. It is not advised to use volatile or poisonous organic solvents in the apparatus since some vapor evades together with the pressurising gas.

Hoffmann and Pauli produced a pressure pulse of 2.5 MPa and 12 μs duration in aqueous electrolytes by a diaphragm driven by a current pulse passed through a spirally wound solenoid located behind the diaphragm. The pulse was propagated through 20 cm of water and then entered a conductivity cell. The low amplitude of the pressure pulse and its short duration limited the applicability of the apparatus to studies with aqueous electrolytes in the 1–10 μs range.

For realizing shock waves of large amplitude with short rise time and at least 50 μs duration in a handy apparatus of more general use another physical principle must be applied. The purpose of this work has been to develop such an apparatus for relaxation kinetics studies in different solvents using the optical detection system of commercial temperature jump equipment. It supplements the pressure jump autoclave developed by Knoche and coworkers [7] limited in time resolution to relaxation times longer than 100 μs [1]. To demonstrate the performance of the apparatus with different solvents the dissociation of Sudanorange G in water and the proton transfer reaction between the Rubazonic acid 1 [8] and N-Methylpiperidine

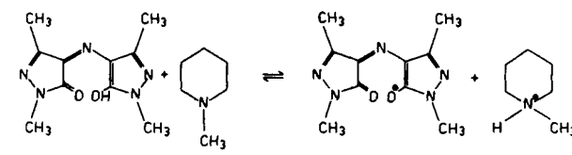

1

in acetonitrile were measured.

2. Principle of the Method

Rapid heating of a liquid at constant volume produces a pressure jump, whose amplitude depends upon the thermal expansion coefficient α and the isothermal compressibility k

$$\left(\frac{dp}{dT}\right)_v = \frac{\alpha}{k_T}. \tag{1}$$

An electrolyte solution is heated by the discharge of a capacitor with capacitance C by the amount

$$\Delta T = \frac{C \cdot U^2}{2nc_v} \tag{2}$$

where $1/2C \cdot U^2$ is the electrical energy stored in the capacitor, n the number of moles of electrolyte solution and c_v its molar heat at constant volume.

By Eqs. (1) and (2) the pressure increase Δp is determined:

$$\Delta p = \frac{\alpha C U^2}{k_T 2nc_v}(1 - \exp(-2t/RC)). \tag{3}$$

The pressure rises with the time constant

$$\tau_c = \frac{1}{2} RC. \tag{4}$$

Table 1
Pressure jump p, calculated for the discharge of a 45 kV capacitor with C = 50 nF, through 4 ml of solvent, and estimated values of L, the travelling way needed to sharpen the leading edge of the pressure pulse to a shock front, for different solvents at 20 °C

	Δp (MPa)	L (cm)
Ethanol	7.1	34
Methanol	7.9	29
Acetone	8.3	34
Acetonitrile	12.5	28
Water	1.35	334

In Table 1 the values of Δp calculated for discharging a 50 nF, 40 kV capacitor through 4 ml of some representative solvents at 20 °C are listed. Table 1 shows that the energy stored in the high voltage capacitor of a commercial temperature jump apparatus is sufficient to produce a pressure jump of 7.0 – 12.0 MPa in organic solvents. This is comparable with the pressures used in conventional shock wave apparatus. The physical properties of water are much less favorable. The time constant τ_e is determined by C and the resistance R of the solution. One is free to choose a value much shorter than the bursting time of a membrane. This allows achieving an ideal step function with a much shorter tube length. The shock front has a rectangular profile after the way L [1]

$$L = c_0^2 \cdot \left(\frac{dp}{dt}\right)^{-1} \cdot \left(\frac{\partial c}{\partial p}\right)^{-1}, \tag{5}$$

where c_0 is the velocity of sound in the liquid at normal pressure, $\partial c/\partial p$ is the pressure dependence of the velocity of sound and dp/dt is the initial slope of the pressure step. A good estimate of L is obtained when the average of the pressure increase to 90% of its final value according to Eq. (3) is taken as dp/dt. In Table 1 such values of L are listed, calculated with assumed cell resistances of 150 Ohm for the organic solvents and 50 Ohm for water. The small pressure dependence of sound velocity and the small pressure increase result in a long way L for water. Acetonitrile has the best properties.

3. Experimental Section

Design and Performance of the Apparatus

Fig. 1 is a sectional view of the shock tube. It consists of three parts: the discharge cell (C), a connecting tube (G), and the measuring cell (K). The shock wave is produced by discharging the high voltage capacitor (50 nF, 45 kV) of a temperature jump spectrometer (Meßanlagen, Göttingen) through an electrolyte solution. The solution is placed between the silver plated high voltage electrode (A) forming the bottom of the cell and the grounded ring electrode (E) on the top. The high voltage parts are isolated against the cell wall by pieces of Polyamide forming a beaker. The electrodes are isolated against each other by a cylindrical piece of Alumina (Degussit) (D). Its length determines the pulse duration. With a total cell length of 6.1 cm and a 0.7 mol/l solution of $AgBF_4$ in Acetonitrile the resistance was 150 Ohm; the risetime of the pressure pulse was 3.7 µs and its length more than 80 µs. A 16 cm long tube (G) filled with Acetonitrile was sufficient to shorten the risetime to 1.4 µs. The electrolyte solution was separated from the liquid column by a thin Polyamide membrane (F).

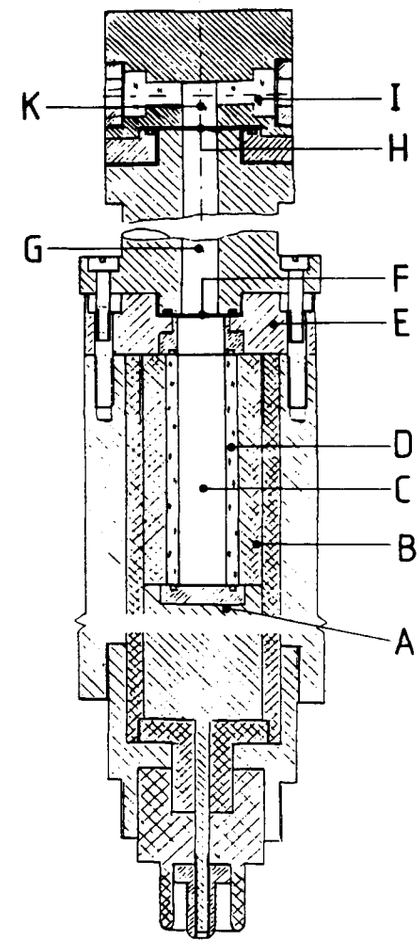

Fig. 1
Shock wave tube. A: high voltage electrode; B: polyamide isolation; C: discharge cell; D: alumina; E: ground electrode (silver); F, H: polyamide foil; G: tube with Acetonitrile; I: sapphire window; K: cell

The measuring cell is equipped with two plane sapphire windows (I) protruding into the cylindrical chamber. Both the discharge cell and the tube have a cylindrical profile. It was found that adapting the profile of the tube to that of the cell did not significantly change the shape of the pressure pulse. The cell volume is 0.96 cm^3. After filling with the solution under study the cell is firmly closed with the plastic membrane (H), turned upside down and put on top of the tube. It was always necessary to remove small gas bubbles from the tube by pressurising the liquid column to 2.0 – 2.5 MPa using liquid from a pump connected with the tube. With pressures up to 5.0 MPa identical results were obtained.

The shock tube is put into the temperature jump spectrometer with the measuring cell as the upper end. This makes it very easy to change the solution under study. The relaxation processes can be monitored in the reflected wave close to the bottom of the cell. As the shock wave is produced electrically and no bursting mechanical parts and no gases are involved signal averaging is possible without opening the apparatus; the reproducibility is excellent. In each discharge some silver is dissolved from the high voltage electrode because of a secondary reaction of the first produced BF_4-radical. The silver is deposed at the grounded electrode so that in each experiment about 2.2 micrograms of silver are transported from the lower to the upper electrode in the discharge cell. Hundreds of experiments were performed in series without any damage at the mechanical parts except for the membrane (F), which was occasionally ruptured and was then replaced together with the electrolyte solution.

A typical optical signal without relaxation is shown in Fig. 2 together with the curve fit with an exponential. The pressure was measured directly with a transducer. Between the square of the condensor voltage and the pressure amplitude there exists a linear relation (Fig. 3), in good agreement with Eq. (3). The slope of $5.09 \cdot 10^{-9}$ MPa/V^2 is somewhat smaller than the value of $5.4 \cdot 10^{-9}$ MPa/V^2 calculated for pure Acetonitrile, indicating some damping of the pulse.

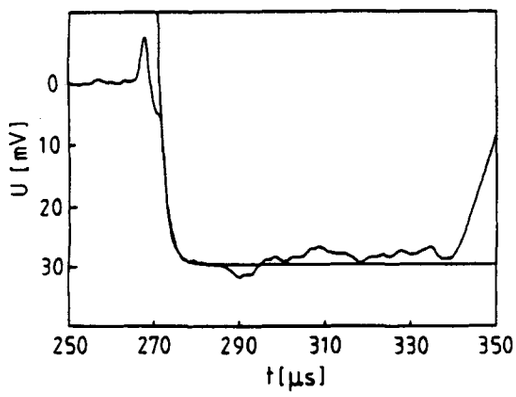

Fig. 2
Pressure pulse, optical monitoring using **1**, and exponential fitting curve with $\tau = 1.4$ µs

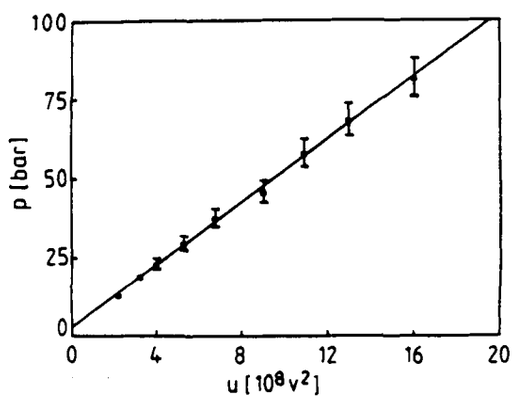

Fig. 3
Dependence of the pressure jump on the discharge voltage

Chemicals and Solutions

The Rubazonic acid **1** was the sample used before [8]. N-Methylpiperidine (Merck) was distilled twice ober basic Alumina. The purification of Acetonitrile has been described elsewhere [9]. Sudanorange G (Aldrich) was purified by column chromatography on silicagel with Chloroform as eluant. Solutions in twice distilled water were brought to the ionic strength 0.1 mol/l with KNO_3 and the pH adjusted by adding 0.1 n NaOH.

Kinetic Measurements

For all measurements the apparatus was pressurised to 2.5 MPa and a 40 kV voltage was used. This resulted in a pressure increase of 8.0 MPa, so that the kinetics was measured at 10.5 MPa total pressure. The relaxation traces were stored in a transient recorder Krenz model 4000. Five to ten signals were averaged. The proton transfer reaction of **1** was monitored at 528 nm, that of Sudanorange G at 510 nm. No measurable change of pH occured in the Sudanorange G solutions during the experiments.

4. Results and Discussion

Fig. 4 shows a relaxation signal of the proton transfer reaction between the Rubazonic acid **1** (AH) and N-Methylpiperidine (B) in Acetonitrile at ionic strength zero with a relaxation time of 13 µs. The rate data listed in Table 2 are consistent with the simple association

$$AH + B \underset{k_b}{\overset{k_f}{\rightleftharpoons}} A^-HB^+ \tag{6}$$

with the relaxation time given by

$$\tau = k_f \cdot (c_{AH} + c_B) + k_b \,. \tag{7}$$

From the data in Table 2 the rate constants $k_f = 4.5 \cdot 10^6$ $l \cdot mol^{-1} \cdot s^{-1}$ and $k_b = 6.7 \cdot 10^4$ s^{-1} are calculated. In the experiments all parts of the apparatus were filled with Acetonitrile.

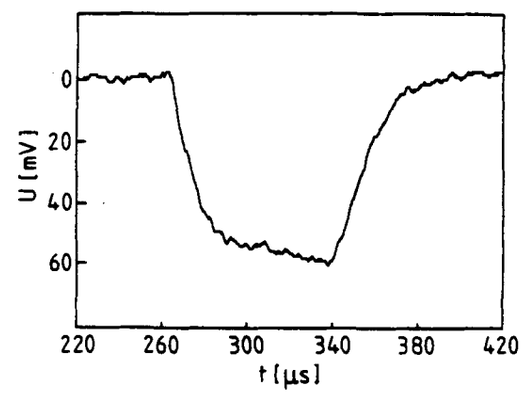

Fig. 4
Relaxation signal. Rubazonic acid, $c_0 = 8.7 \cdot 10^{-5}$ mol/l and N-Methylpiperidine, $c_0 = 5.77 \cdot 10^{-3}$ mol/l in Acetonitrile, $T = 17$ °C; $\tau = 11$ µs

Table 2
Relaxation times for proton transfer between Rubazonic acid **1**, $c_0 = 8.7 \cdot 10^{-5}$ mol/l, and N-Methylpiperidine B in Acetonitrile. $T = 17$ °C

c_B (mol/l)	τ (µs)
$1.65 \cdot 10^{-3}$	13.4 ± 0.9
$4.12 \cdot 10^{-3}$	11.6 ± 0.7
$5.77 \cdot 10^{-3}$	11.0 ± 0.5
$8.24 \cdot 10^{-3}$	9.5 ± 0.9

For measuring the dissociation kinetics of Sudanorange G the discharge cell and the tube were filled with Acetonitrile, whereas the measuring cell contained the alkaline aqueous solution of Sudanorange G (AH^-). The reaction is

$$AH^- + OH^- \underset{k_b}{\overset{k_f}{\rightleftharpoons}} A^{2-} + H_2O \,. \tag{6}$$

Because of the excess of the OH^- ions the relaxation time is given by

$$\tau = k_f \cdot c_{OH} + k_b \,. \tag{9}$$

The kinetic data are listed in Table 3. The calculated rate constants $k_f = 1.1 \cdot 10^6\ l \cdot mol^{-1} \cdot s^{-1}$ and $k_b = 1.2 \cdot 10^4\ s^{-1}$ are in good agreement with $k_f = 1.2 \cdot 10^6\ l \cdot mol^{-1}\ s^{-1}$ and $k_b = 1.1 \cdot 10^4\ s^{-1}$ obtained by Rose and Stuehr [10] using the temperature-jump method.

Table 3
Relaxation times for dissociation of Sudanorange G, $c_0 = 8.6 \cdot 10^{-5}$ mol/l, in water. $T = 17$ C, ionic strength $I = 0.1$ mol/l

pH	τ (μs)
12.2	29.2 ± 1.1
12.3	24.3 ± 1.8
12.4	22.8 ± 1.3
12.5	17.3 ± 1.0

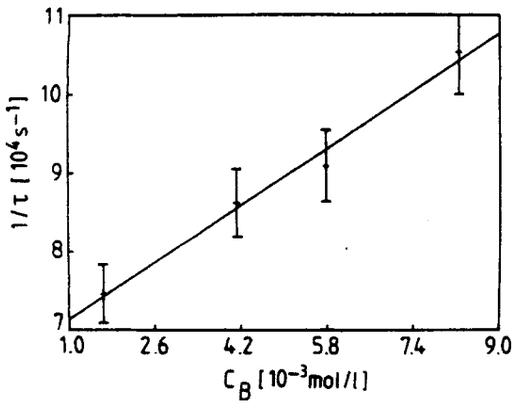

Fig. 5
Plot of rate data for proton transfer between Rubazonic acid 1 and N-Methylpiperidine in Acetonitrile, $T = 17$ C

In both cases the rate constant k_f of deprotonation of the acid is smaller than the diffusion-controlled limit, by about three orders of magnitude. The protons of both acids are involved in very strong intramolecular hydrogen bonds [8]. Therefore, energy is required to break the bond during the proton transfer and correspondingly the deprotonation rates are slowed down. It is interesting to note that the effect is not stronger in Acetonitrile than in water, although it has been argued [11] that the intramolecular hydrogen bond must be replaced by intermolecular ones to the solvent before proton transfer can occur. Much slower rates in acetonitrile would be expected on the basis of this argument, because the latter kind of hydrogen bonding is much weaker in Acetonitrile than in hydroxylic solvents.

Our results show that it is not necessary to use the same solvent in all parts of the apparatus. This offers the opportunity of studying very fast reactions in solvents with widely differing properties. In principle the choice of solvent in the cell is almost arbitrary; the best pulse shapes were obtained, however, when the acoustic impedance of the solution in the cell was equal or greater than that of the liquid in the tube. It is also an advantage that reactions may be studied at arbitrary ionic strength, since the principle of operation and the optical detection do not involve the presence of ions in the measuring cell.

Support of this research by the Deutsche Forschungsgemeinschaft and the Fonds der Chemischen Industrie is gratefully acknowledged.

References

[1] W. Knoche, in: "Investigation of Rates and Mechanism", ed. C. Bernasconi, John Wiley and Sons, New York 1986.
[2] See e.g. a) M. Eigen, W. Kruse, G. Maaß, and L. DeMaeyer, Prog. React. Kinet. *2*, 285 (1964); b) M. Eigen and L. DeMaeyer, in: "Techniques of Chemistry", Vol. VI, Part 2, ed. G. G. Hammes, Wiley-Interscience, New York 1974; c) C. F. Bernasconi, "Relaxation Kinetics", Academic Press, New York 1976; d) R. Süttinger and F. Strohbusch, Ber. Bunsenges. Phys. Chem. *88*, 750 (1984).
[3] H. Hoffmann and K. Pauli, Ber. Bunsenges. Phys. Chem. *70*, 1052 (1966).
[4] A. Jost, Ber. Bunsenges. Phys. Chem. *70*, 1057 (1966).
[5] H. Hoffmann and E. Yeager, Rev. Sci. Instr. *39*, 1151 (1968).
[6] G. Platz and H. Hoffmann, Ber. Bunsenges. Phys. Chem. *76*, 491 (1972).
[7] a) W. Knoche and G. Wiese, Rev. Sci. Instr. *47*, 220 (1977); b) H.-J. Buschmann and W. Knoche, Ber. Bunsenges. Phys. Chem. *81*, 72 (1977).
[8] S. Bratan, F. Strohbusch, and W. Hänsel, Z. Naturforsch. *31B*, 1106 (1976).
[9] J. Heinze and Ch. Heyne, 7th International Conf. on Nonaqueous Solutions, Vol. 2, p. 35, Regensburg 1980; Ch. Heyne, Dissertation, Freiburg 1979.
[10] M. C. Rose and J. E. Stuehr, J. Am. Chem. Soc. *93*, 4350 (1971).
[11] M. Eigen and W. Kruse, Z. Naturforsch. *18b*, 857 (1963); see also E. M. Eyring, D. D. Marshall, F. Strohbusch, and R. Süttinger, Am. Chem. Soc. Symp. Ser. *198*, 63 (1982).

(Eingegangen am 19. August 1988, endgültige Fassung am 31. August 1989) E 6899

Nuclear Magnetic Relaxation and Spin Jumping Between Three Unequal Potential Wells

L. Latanowicz and Z. Pająk

Institute of Physics, A. Mickiewicz University, Grunwaldzka 6, 60-780 Poznań, Poland

Molecular Structure / Spectroscopy, Nuclear Magnetic Resonance

Expressions have been derived for relaxation times T_1, $T_{1\varrho}$ and dipolar second moment for polycrystalline solids in which nuclei jump between three sites of unequal energy. Relaxation rates appear very sensitive to the potential energies at the sites and to the change of $\boldsymbol{R}_{ik}$ vector length. The expressions derived are applicable for the study of hindered rotation of molecular groups, especially where the interatomic distances are instantenously changed during the motion. An example of application is provided by hindered rotation of free hydroxyl group of α-D glucose and β-D fructose.

Ber. Bunsenges. Phys. Chem. *93*, 1440–1446 (1989) – © VCH Verlagsgesellschaft mbH, D-6940 Weinheim, 1989.
0005–9021/89/1212–1440 $ 02.50/0